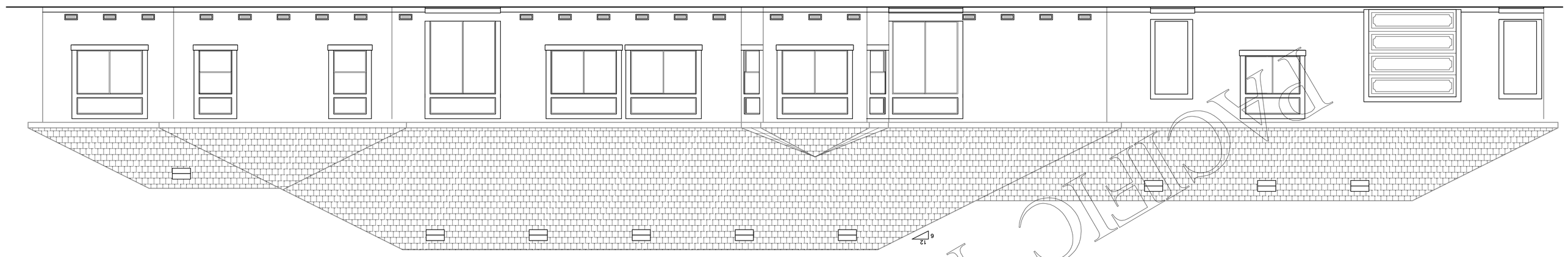

REAR ELEVATION
SCALE 1/4" = 1'-0"

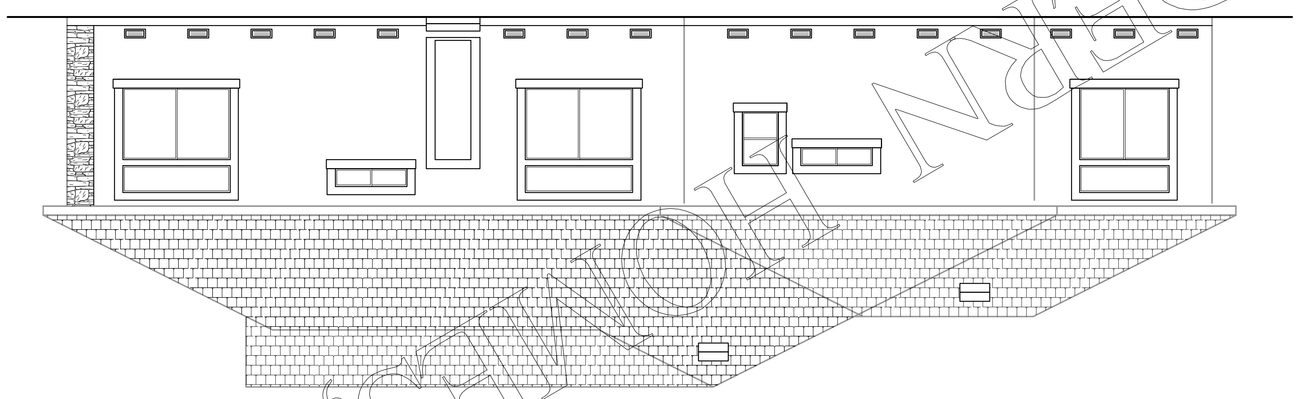

LEFT ELEVATION
SCALE 1/4" = 1'-0"

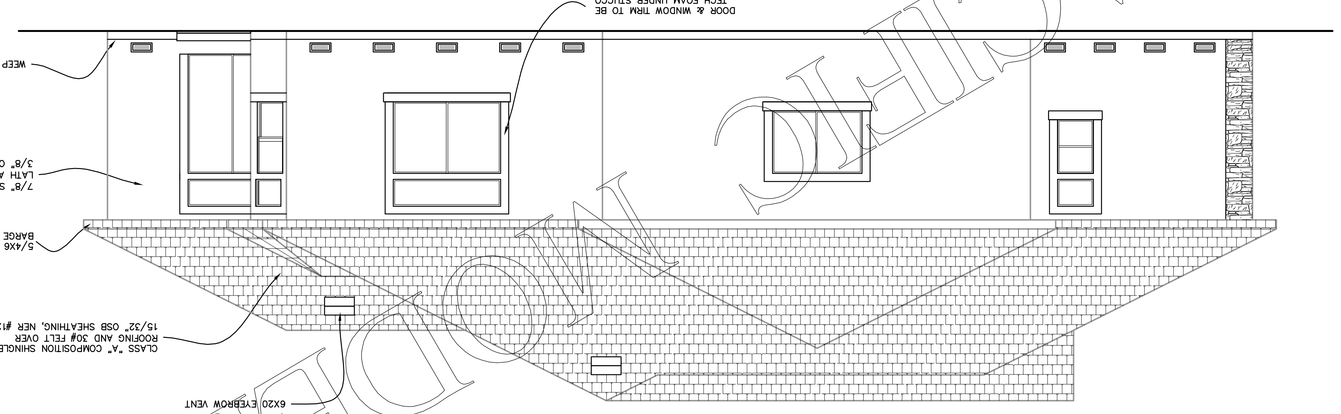

RIGHT ELEVATION
SCALE 1/4" = 1'-0"

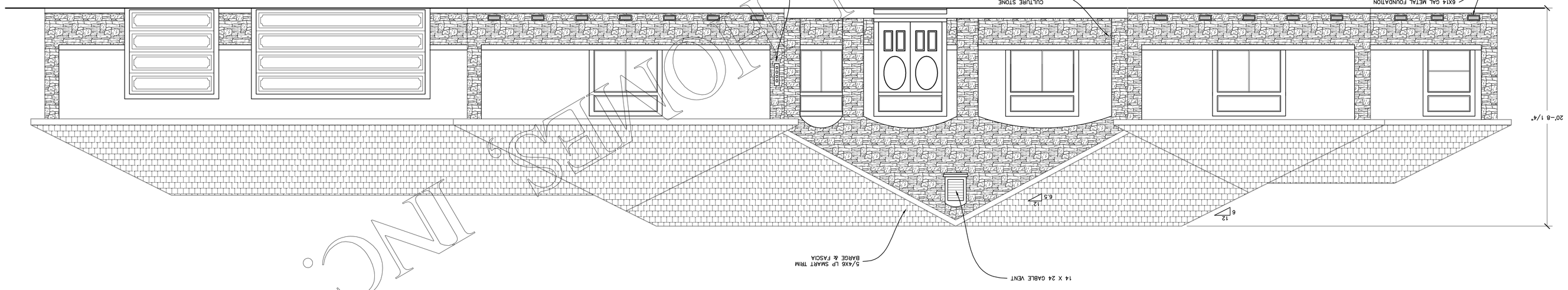

FRONT ELEVATION

PACIFIC MODERN HOMES, INC.

PRE-ENGINEERED PHOENIX

RESIDENCE FOR:

DATE:
SCALE: 1/4" = 1'-0"
DRAWN BY:
CHK'D BY:
SHEET: 1

ELEVATIONS

PACIFIC MODERN HOMES
P.O. BOX 670
ELK GROVE, CA.
95759-9514
PHONE: (916) 685-9514

REVISIONS:	BY: